ELECTRICAL ROTATING CONNECTOR

- Very low electric noise
- Very low cost
- Very low contact resistance (Less than 1mΩ)
- No maintenance and better reliability than traditional slig rings
- Suitable for signal and power transfer of rotating devices or instruments

Construction and Function

The Asiantool rotating electrical connectors are using the special insulation, sealing, and conductive technologies. The out case material is the aluminum alloy or stainless steel.
They are used for any kind of rotating objects of signals like micro voltage, current, EMF, thermo couple, strain gauge, audio, video, high frequency etc. and electric power connections.

All types of our liquid metal rotary connectors support CE RoHS compliance.
Please contact us for detail.

Application

- Index table for signal and power connection
- Resistor cutting machine
- Electro plating line
- Rotary stage
- Cable wheel
- Circle knitting machine
- Coloring device
- Robots
- Rotary lamp box
- Surgical lamp
- Reel to reel plating line equipment
- Speed dome camera
- Package machine
- Heating roller
- Laminating machine
- Winding machine
- Spinning LED sign board
- Wind Turbines
- Pipe inspection Camera
- Welding machines

INDEX

Electrical Rotating Connector

Non-mercury slip rings
CE RoHS compliance gallium alloy liquid metal rotary connectors

ELECTRICAL ROTATING CONNECTOR
SINGLE CONDUCTOR

Specification

Model	Conductor Poles	Current Amp.	Voltage AC/V	Max. Freq. MHZ	Max. RPM	Operating Temp. Max/Min °C	Rotating Torque (gm-cm)	Insulation Resistance
A1M	1	10	N/A	200	3600	60/-30	35	N/A
A1MT	1	10	N/A	200	3600	60/-30	35	N/A
A1M2	1	20	N/A	200	2000	60/-30	50	N/A
A1M5	1	50	N/A	200	1800	60/-30	70	N/A
A1M12	1	120	N/A	200	1500	60/-30	150	N/A
A1HH	1	250	N/A	200	1200	60/-30	250	N/A
A1H25S	1	250	N/A	200	1200	60/-30	250	N/A
A1H25PS	1	250	N/A	200	1200	60/-30	250	N/A
A1H35S	1	350	N/A	200	800	60/-30	300	N/A
A1H50S	1	500	N/A	200	300	60/-30	700	N/A
A1H50PS	1	500	N/A	200	300	60/-30	700	N/A
A1H65S	1	650	N/A	200	200	60/-30	1000	N/A
A1H65PS	1	650	N/A	200	200	60/-30	1000	N/A
A1H90PS	1	900	N/A	200	200	60/-30	1100	N/A
A1H150PS	1	1500	N/A	200	100	60/-30	2000	N/A
A1H300PS	1	3000	N/A	200	60	60/-30	3000	N/A
A1H500FS	1	5000	N/A	200	30	60/-30	5000	N/A
A1H750FS	1	7500	N/A	200	20	60/-30	7000	N/A

Model, Size, accessories

A1M 1pole 10A

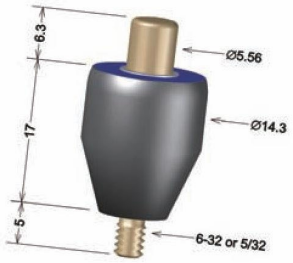

A1MS

◀AIM-1
Receptaciles

SUS body + SUS bearing

● Mounting

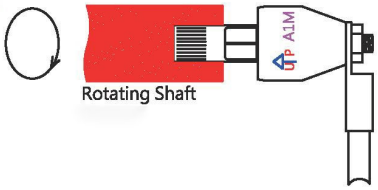

Holding by electric wire

A1MT 1pole 10A

A1MTS

SUS body + SUS bearing

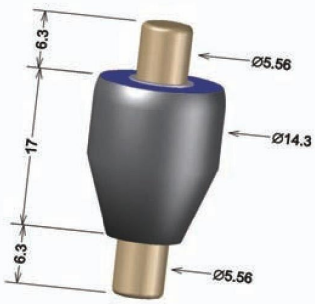

◀AIM-5
Plastic cap

● Mounting

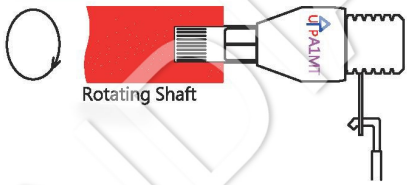

Holding by electric wire

A1M2 1pole 20A

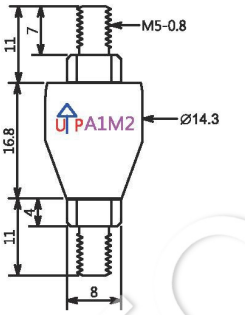

A1M2S

SUS body + SUS bearing

● Mounting

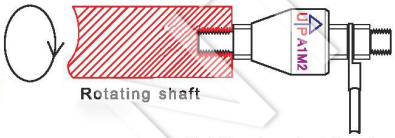

Holding by electric wire

A1M5 1pole 50A

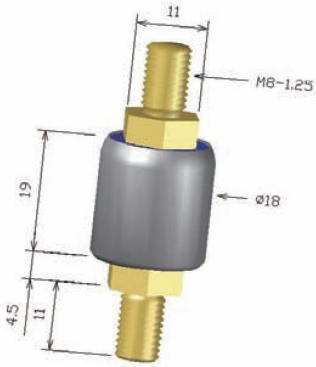

A1M5S

SUS body + SUS bearing

A1M12 1pole 120A

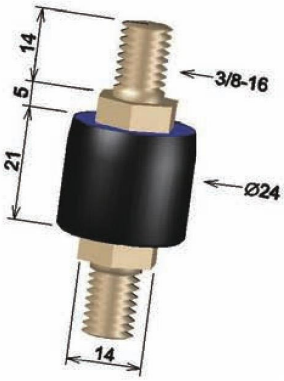

A1M12S

SUS body + SUS bearing

A1HH 1pole 250A

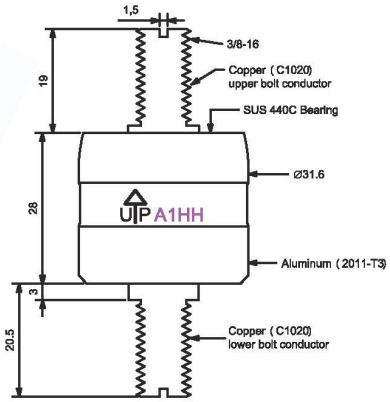

Model, Size, accessories

A1H25S 1pole 250A

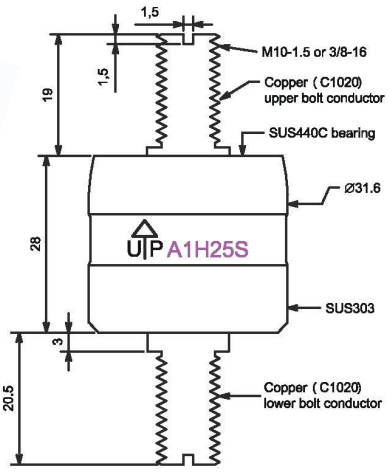

A1H25PS 1pole 250A

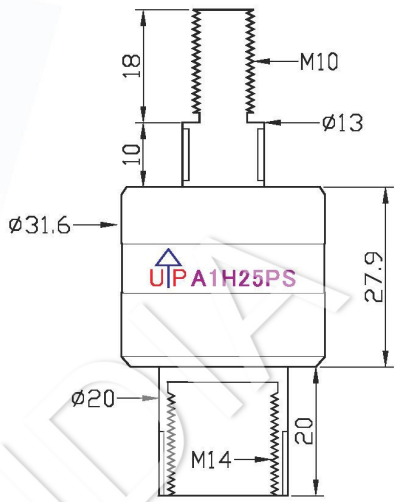

A1H35S 1pole 350A

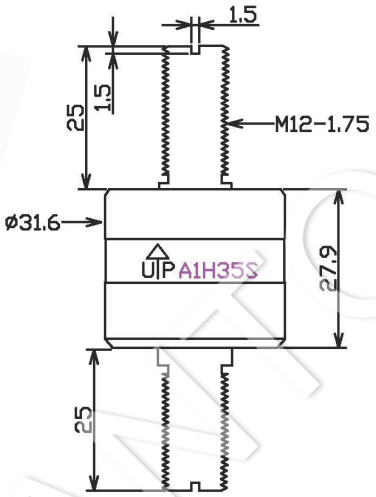

A1H50S 1pole 500A

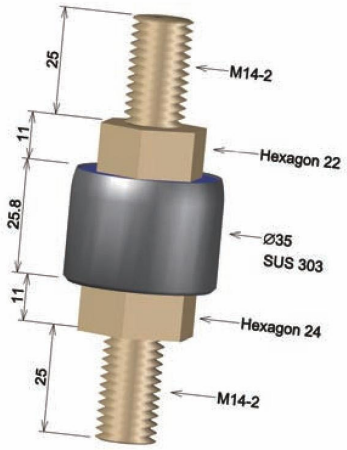

A1H50PS 1pole 500A

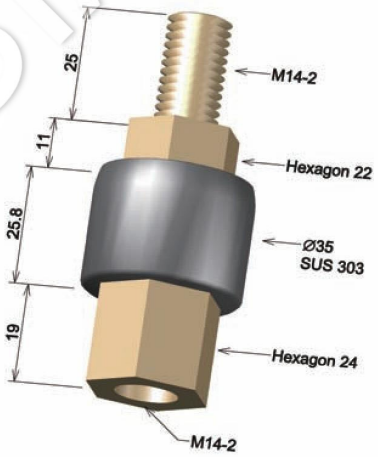

A1H65S 1pole 650A

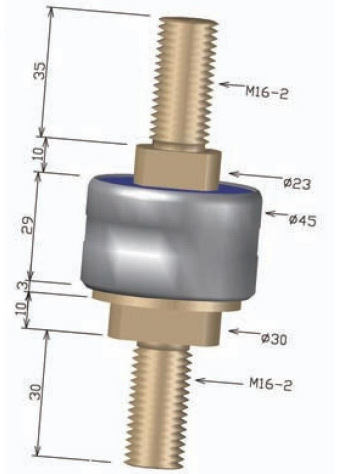

Model, Size, accessories

A1H65PS 1pole 650A

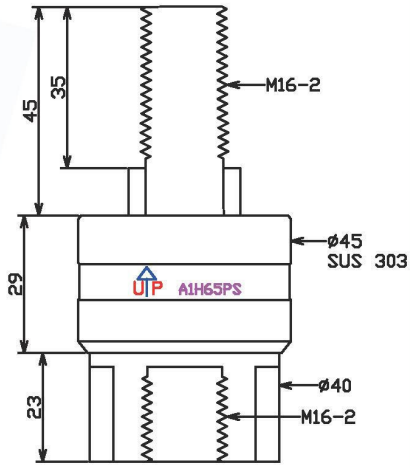

A1H90PS 1pole 900A

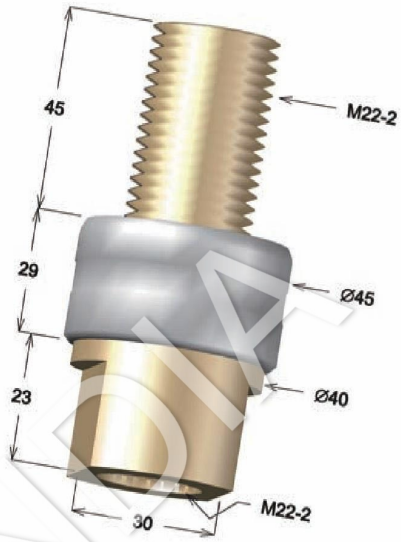

A1H150PS 1pole 1500A

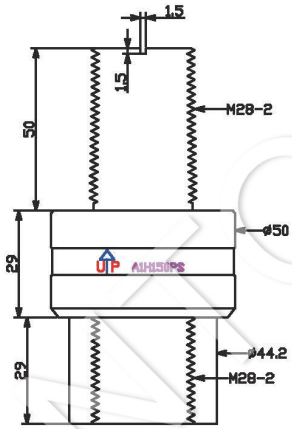

A1H300PS 1pole 3000A

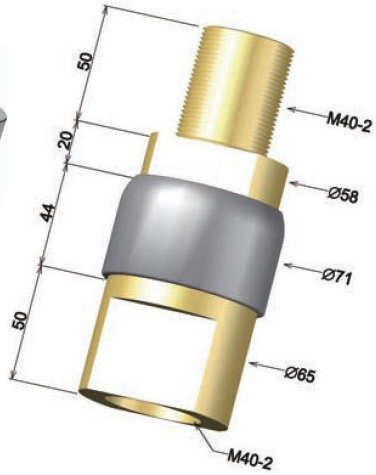

Mounting

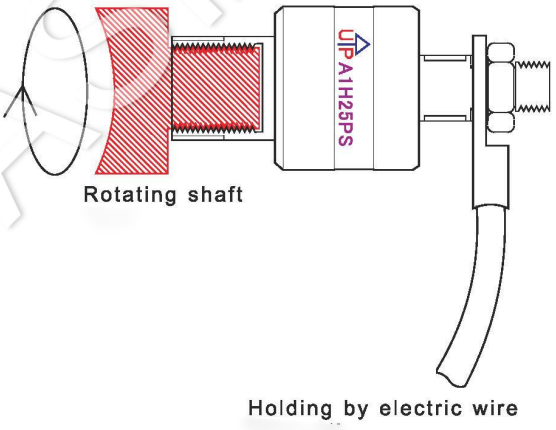

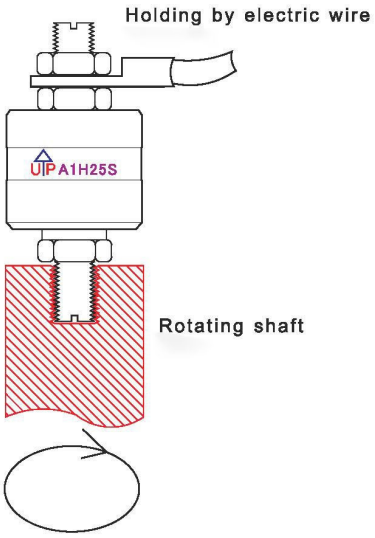

MULTI CONDUCTORS

Specification

Model	Conductor Poles	Current Amp.	Voltage AC/V	Max. Freq. MHZ	Max. RPM	Operating Temp. Max/Min °C	Rotating Torque (gm-cm)	Insulation Resistance
A2S	2	4	250	200	2000	60/-30	75	> 25MΩ
A3S	3	4	250	200	1800	60/-30	100	> 25MΩ
A2H	2	30	250	200	1800	60/-30	200	> 25MΩ
A3M	3	30/4	250	200	1800	60/-30	200	> 25MΩ
A3H	3	30	250	200	1200	60/-30	400	> 25MΩ
A4H	4	30/4	250	200	1200	60/-30	400	> 25MΩ
A6H	6	30/4	250	100	300	60/-30	700	> 25MΩ
A8H	8	30/4	250	100	200	60/-30	1000	> 25MΩ
A1030	10	30/4	250	100	100	60/-30	1500	> 25MΩ
A1230	12	30/4	250	100	60	60/-30	2000	> 25MΩ
A1430	14	30/4	250	100	40	60/-30	3000	> 25MΩ

Model, Size, accessories

A2S 2poles/4A/AC250V

▲A2S-2
Receptacles

▲A2S-5
Plastic cap

A3S 3pole/4A/AC250V

▲A3S-3
Receptacles

▲A3S-5
Plastic cap

Mounting

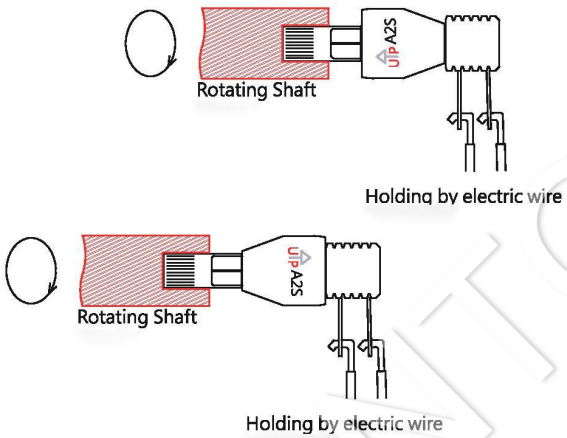

Mounting

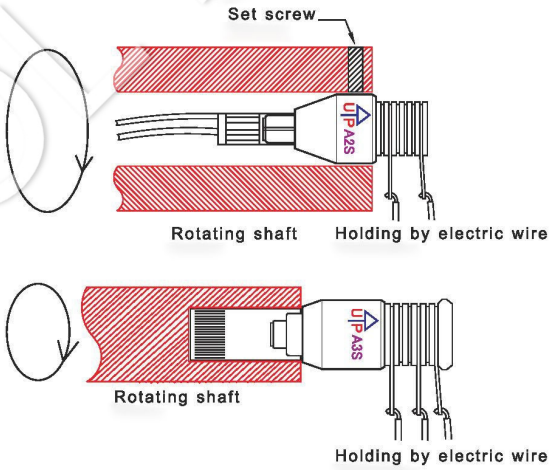

A2H 2poles/30A/AC250V

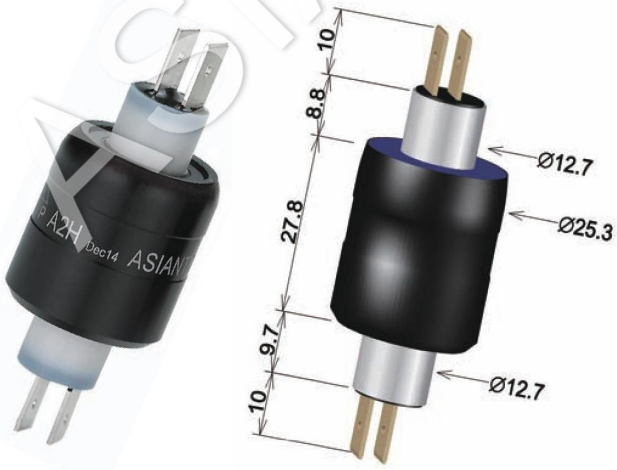

A3M 1pole/30A & 2poles/4A AC250V

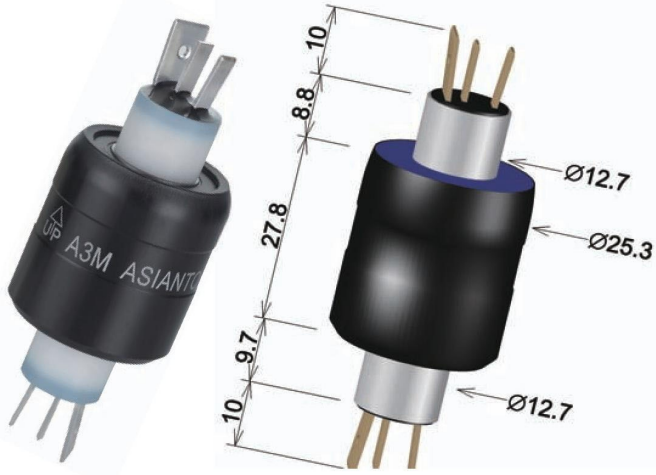

Model, Size, accessories

A3H 3poles/30A/AC250V

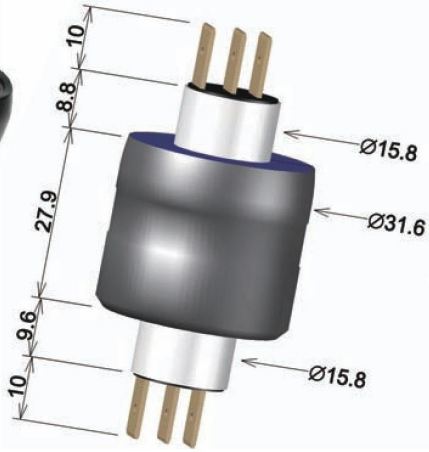

A4H 2poles/30A & 2poles/4A AC250V

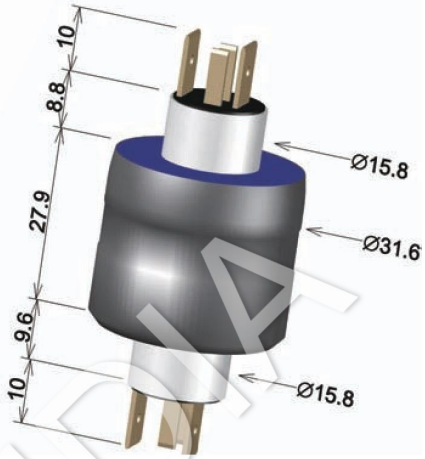

A6H 4poles/30A& 2poles/4A AC250V

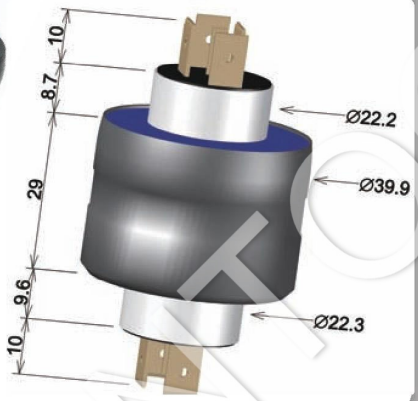

A8H 6poles/30A & 2poles/4A AC250V

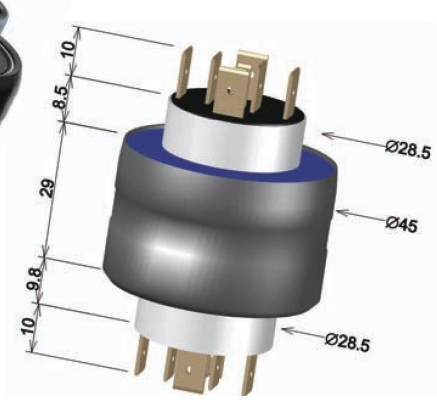

A1030 8poles/30A& 2poles/4A AC250V

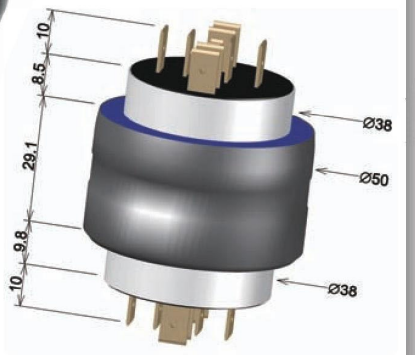

A1230 10poles/30A & 2poles/4A AC250V

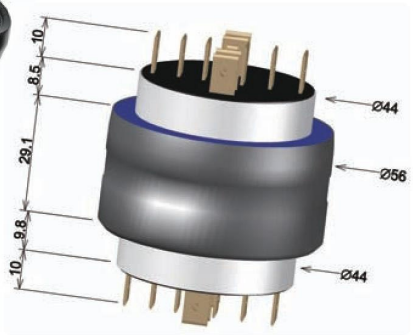

A1430 12poles/30A & 2poles/4A AC250V

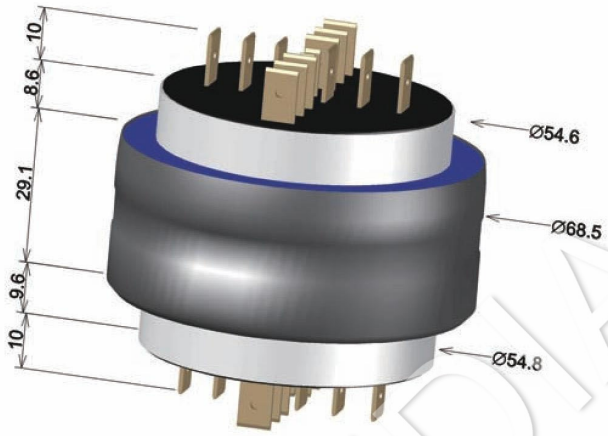

Horizontal mounting

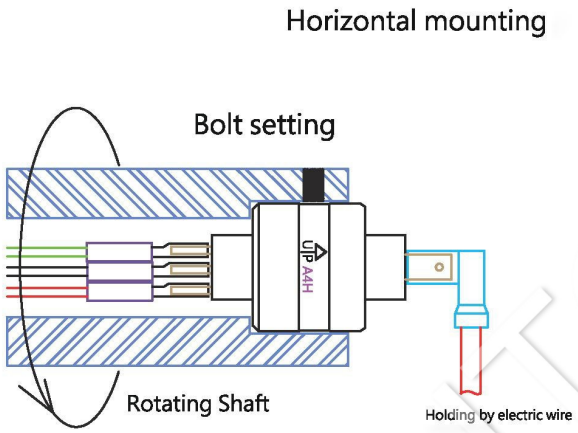

Vertical mounting (bottom)

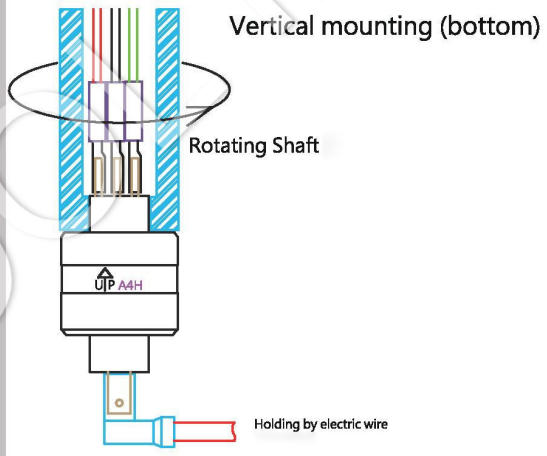

Vertical mounting (Top)

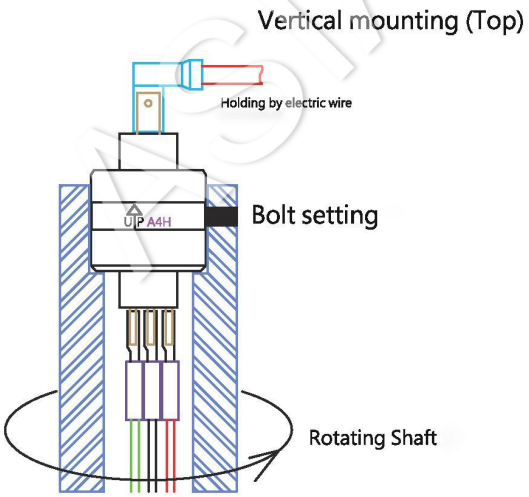

Floting fix shaft

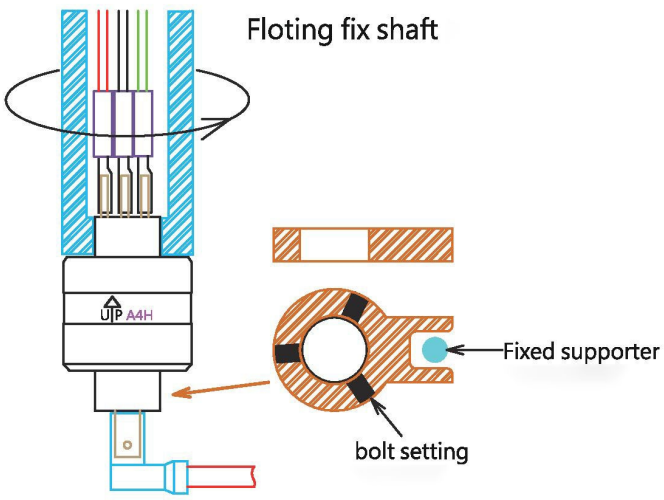

HIGH VOLTAGE MULTI CONDUCTORS

Specification

Model	Conductor Poles	Current Amp.	Voltage AC/V	Max. Freq. MHZ	Max. RPM	Operating Temp. Max/Min °C	Rotating Torque (gm-cm)	Insulation Resistance
A2HV	2	30	500	200	400	60/-30	400	> 50MΩ
A3HV	3	30	500	200	300	60/-30	700	> 50MΩ
A4HV	4	30	500	200	200	60/-30	1000	> 50MΩ
A5HV	5	30	500	200	100	60/-30	1500	> 50MΩ
A6HV	6	30	500	200	60	60/-30	2000	> 50MΩ
A7HV	7	30	500	200	40	60/-30	3000	> 50MΩ
A2V2S	2	4	250	200	300	60/-30	700	> 25MΩ
	2	30	500	200				> 50MΩ
A3V4S	2	4	250	200	100	60/-30	1500	> 25MΩ
	2	30	250	200				> 25MΩ
	2	30	500	200				> 50MΩ

Model, Size, accessories

A2HV 2poles/30A/AC500V

A3HV 3poles/30A/AC500V

A4HV 4poles/30A/AC500V

A5HV 5poles/30A/AC500V

A6HV 6poles/30A/AC500V

A7HV 7poles/30A/AC500V

A2V2S 2poles/4A/AC250V + 2poles/30A/AC500V

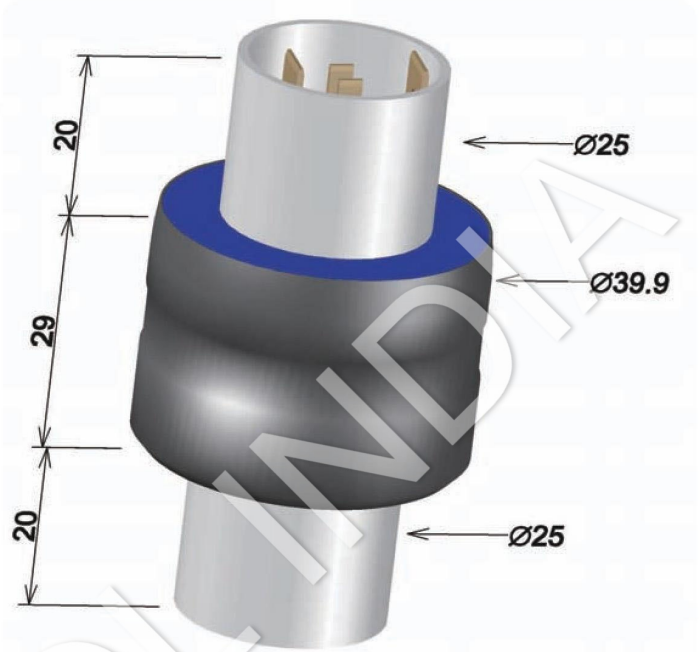

A3V4S 2poles/4A/AC250V + 2poles/30A/AC250V + 2poles/30A/AC500V

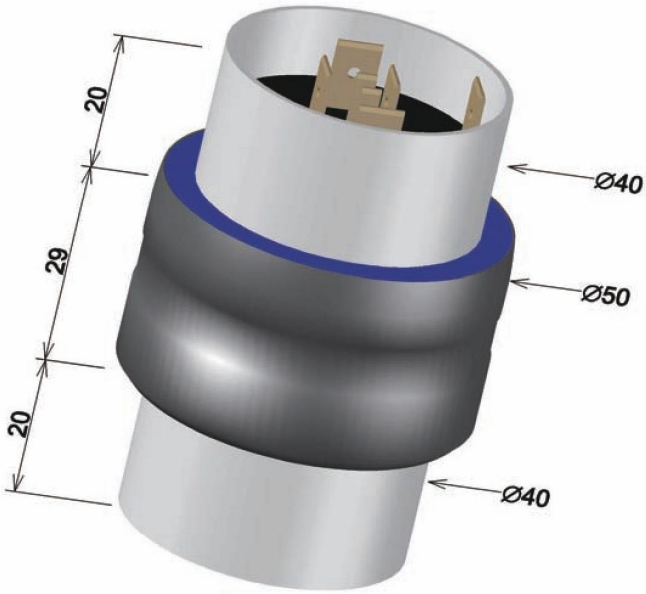

THROUGH BORE MULTI CONDUCTORS (16.2mm)

Specification

Model	Through - bore ψ	Conductor Poles	Current Amp.	Voltage AC/V	Max. Freq. MHZ	Max. RPM	Operating Temp. Max/Min °C	Rotating Torque (gm-cm)	Insulation Resistance
H23016	**16.2mm**	**2**	**30**	250	100	100	60/-30	1000	> 25MΩ
H43016	**16.2mm**	**4**	**30**	250	100	60	60/-30	1500	> 25MΩ
H63016	**16.2mm**	**6**	**30**	250	100	40	60/-30	2000	> 25MΩ
H83016	**16.2mm**	**8**	**30**	250	100	20	60/-30	3000	> 25MΩ

Model, Size, accessories

H23016 2poles/30A/AC250V Through-bore:16.2mm

H43016 4poles/30A/AC250V Through-bore:16.2mm

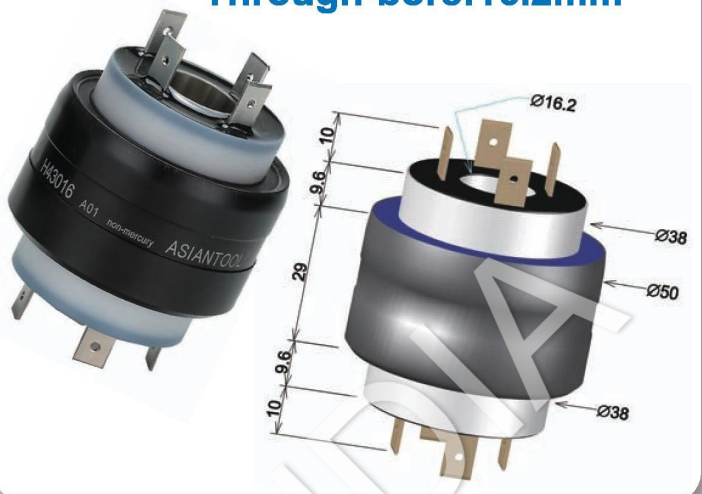

H63016 6poles/30A/AC250V Through-bore:16.2mm

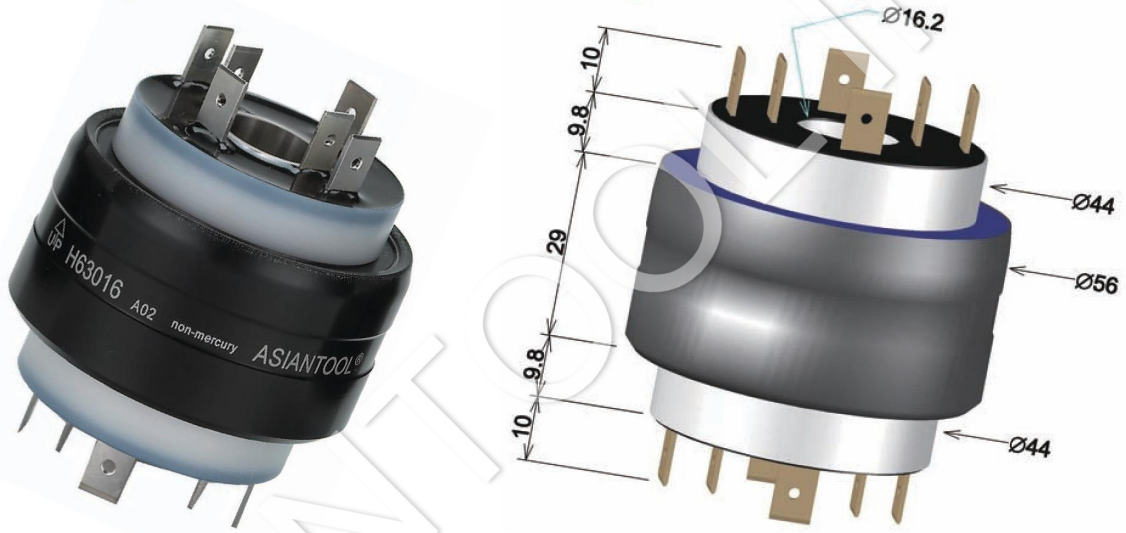

H83016 8poles/30A/AC250V Through-bore:16.2mm

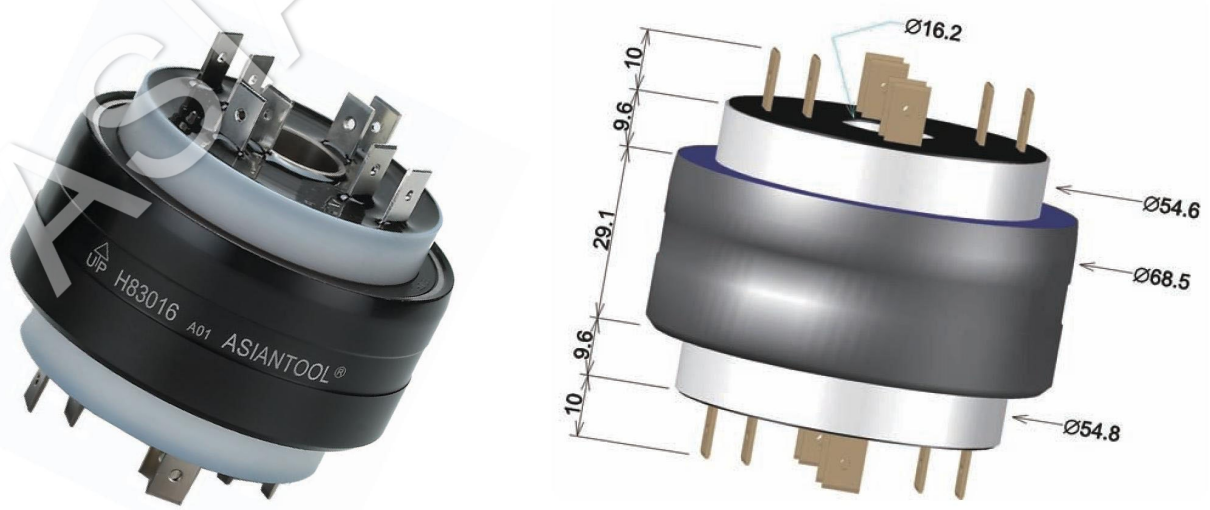

THROUGH BORE MULTI CONDUCTORS (10.2mm)

Specification

Model	Through -bore ψ	Conductor Poles	Current Amp.	Voltage AC/ V	Max. Freq. MHZ	Max. RPM	Operating Temp. Max/Min ˚C	Rotating Torque (gm-cm)	Insulation Resistance
H23010	10.2mm	2	30	250	100	150	60/-30	700	> 25MΩ
H43010	10.2mm	4	30	250	100	100	60/-30	1000	> 25MΩ
H63010	10.2mm	6	30	250	100	60	60/-30	1500	> 25MΩ
H83010	10.2mm	8	30	250	100	40	60/-30	2000	> 25MΩ
H103010	10.2mm	10	30	250	100	20	60/-30	3000	> 25MΩ

Model, Size, accessories

H23010 2poles/30A/AC250V Through-bore:10.2mm

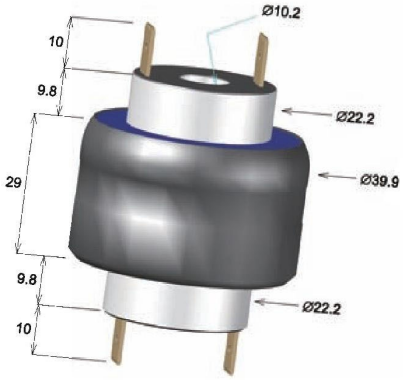

H43010 4poles/30A/AC250V Through-bore:10.2mm

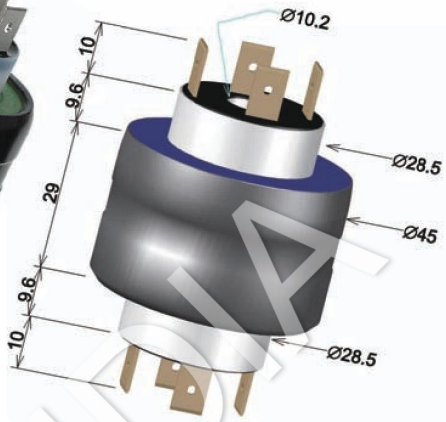

H63010 6poles/30A/AC250V Through-bore:10.2mm

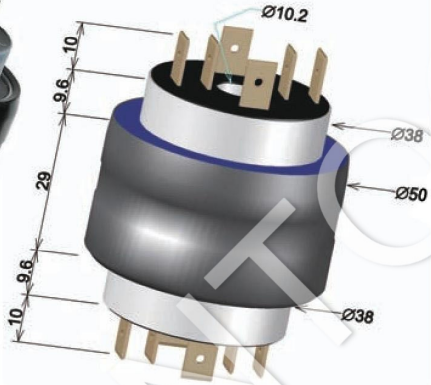

H83010 8poles/30A/AC250V Through-bore:10.2mm

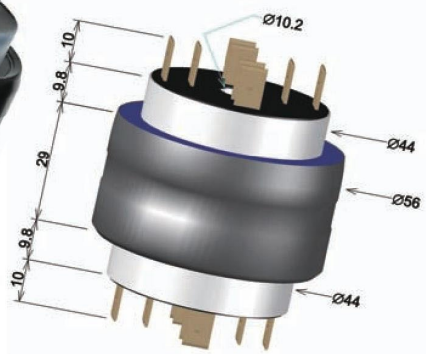

H103010 10poles/30A/AC250V Through-bore:10.2mm

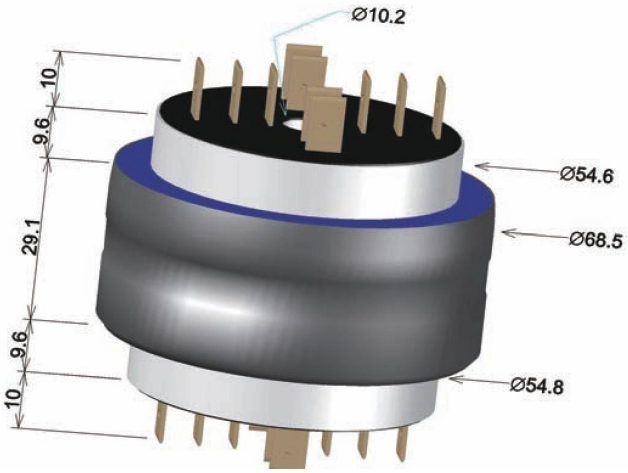

Specification

Model	Conductor Poles	Current Amp.	Voltage AC/V	Max. Freq. MHZ	Max. RPM	Operating Temp. Max/Min °C	Rotating Torque (gm-cm)	Insulation Resistance
A2T	**2**	**1**	DC30V	200	50	60/-30	30	> 2MΩ
A3M-W	**3**	**4**	250	200	1800	60/-30	200	> 25MΩ
A2H6	**2**	**60**	250	100	300	60/-30	700	> 25MΩ
21005W	**7**	**100/4**	250	100	100	60/-30	1500	> 25MΩ

A2T 2poles/1A/DC30V

A3M-W 3poles/4A/AC250V

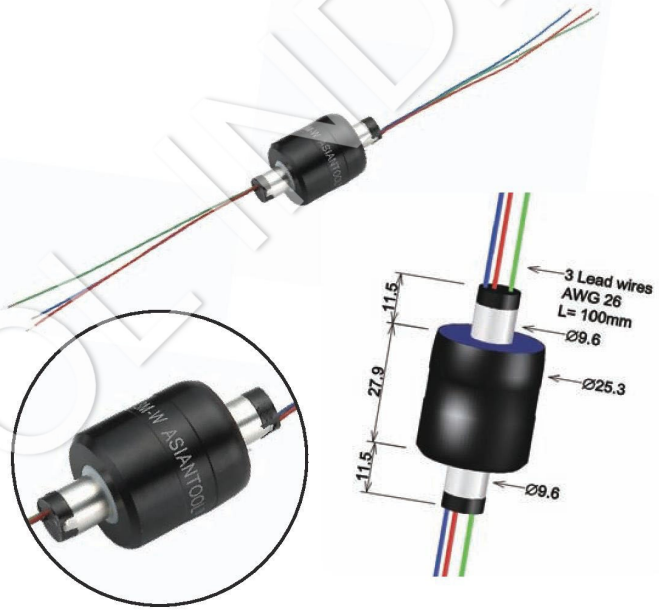

A2H6 2poles/60A/AC250V

21005W 2poles/80-150A/AC250V 5poles/4-10A/AC250V

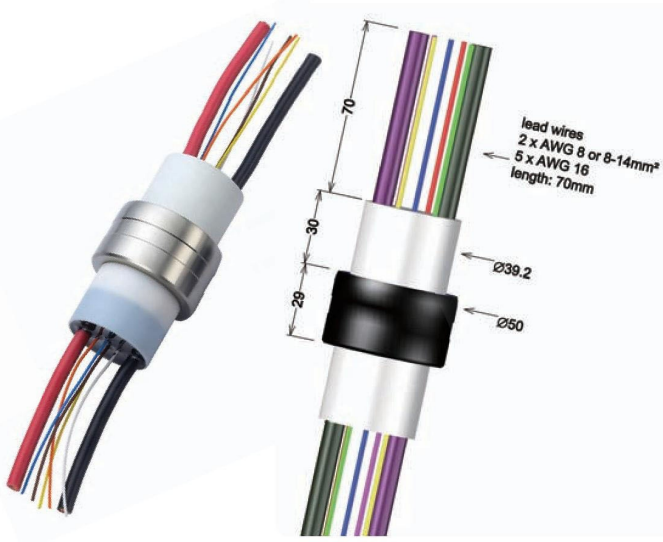

Model, Size, accessories

A1M NM (non-mercury)
1pole 10A

A1MS NM

◀AIM-1
Receptacles

SUS body + SUS bearing

● Mounting

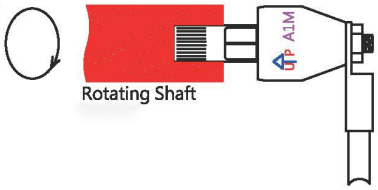

A1MT NM (non-mercury)
1pole 10A

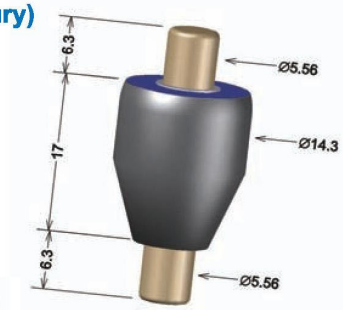

A1MTS NM

SUS body + SUS bearing

◀AIM-5
Plastic cap

● Mounting

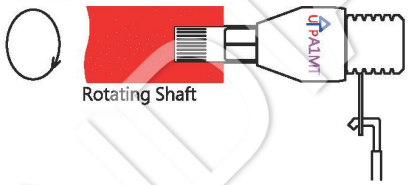

A1M2 NM (non-mercury)
1pole 20A

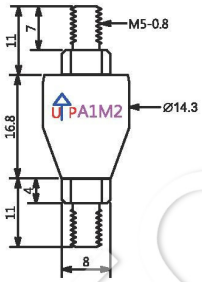

A1M2S NM

● Mounting

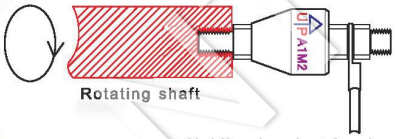

SUS body + SUS bearing

A1M5 NM (non-mercury)
1pole 50A

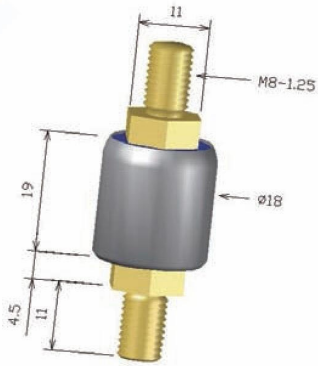

A1M5S NM

SUS body + SUS bearing

A1M12 NM (non-mercury)
1pole 120A

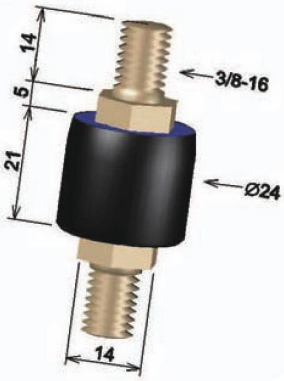

A1M12S NM

SUS body + SUS bearing

A1HH NM (non-mercury)
1pole 250A

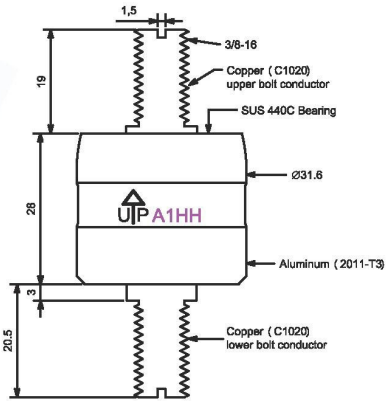

Model, Size, accessories

A1H65PS NM (non-mercury)
1pole 650A

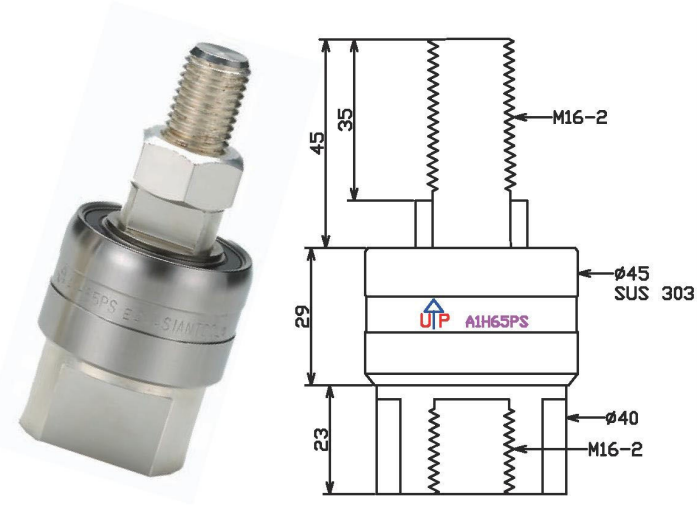

A1H90PS NM (non-mercury)
1pole 900A

A1H150PS NM (non-mercury)
1pole 1500A

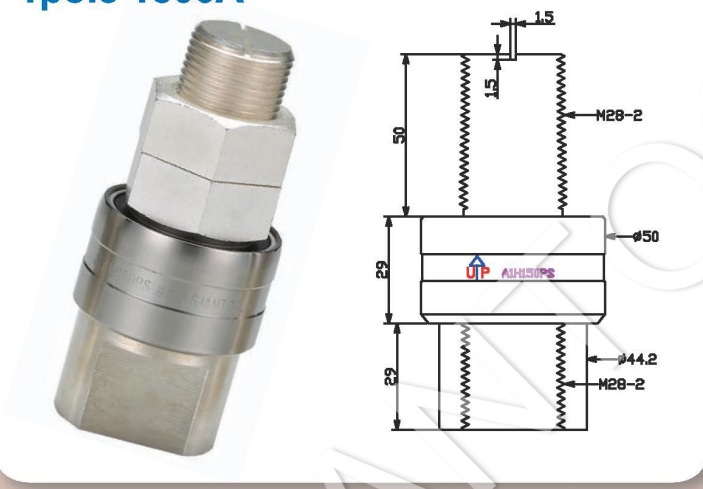

A1H300PS NM (non-mercury)
1pole 3000A

Mounting

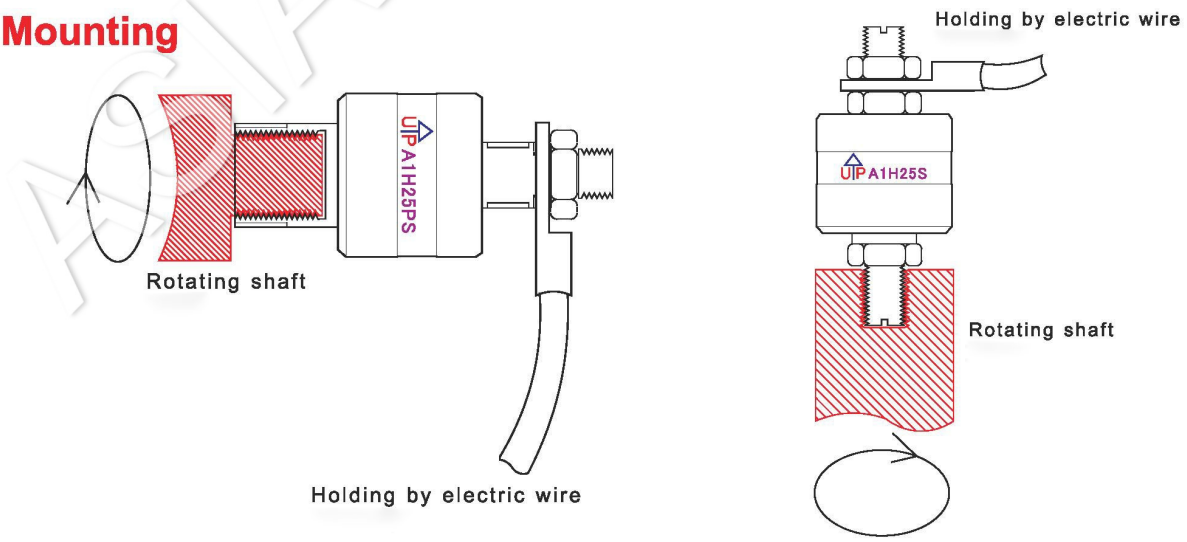

Model, Size, accessories

A2S NM (non-mercury)
2poles/4A/AC250V

▲A2S-2
Receptacles

▲A2S-5
Plastic cap

A3S NM (non-mercury)
3pole/4A/AC250V

▲A3S-3
Receptacles

▲A3S-5
Plastic cap

Mounting

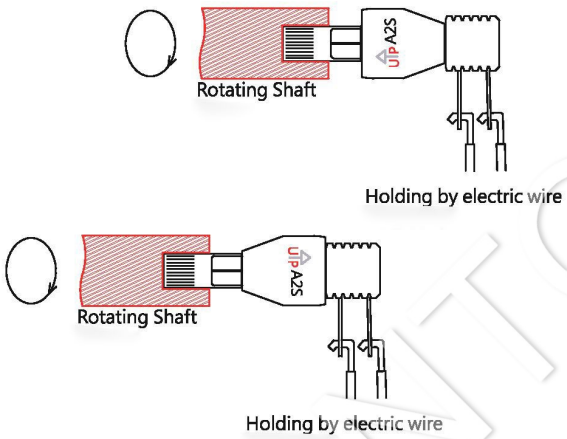

Mounting

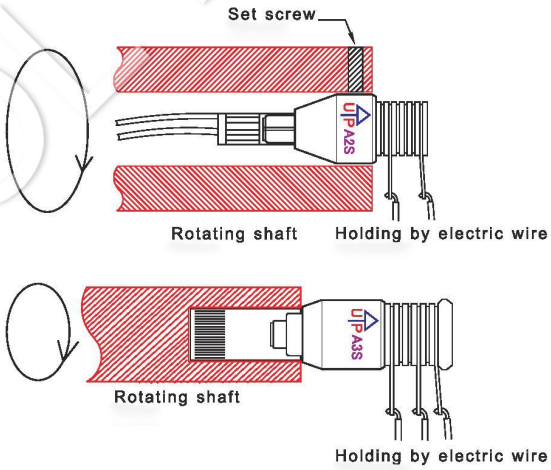

A2H NM (non-mercury)
2poles/30A/AC250V

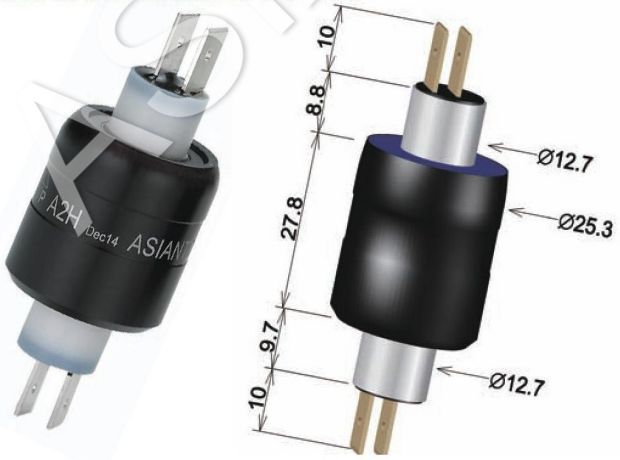

A3M NM (non-mercury)
1pole/30A & 2poles/4A AC250V

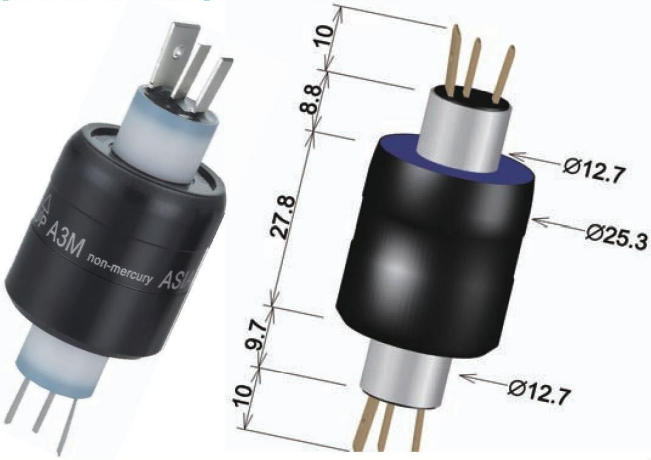

Model, Size, accessories

A2V2S NM (non-mercury)
2poles/4A/AC250V &
2poles/30A/AC500V

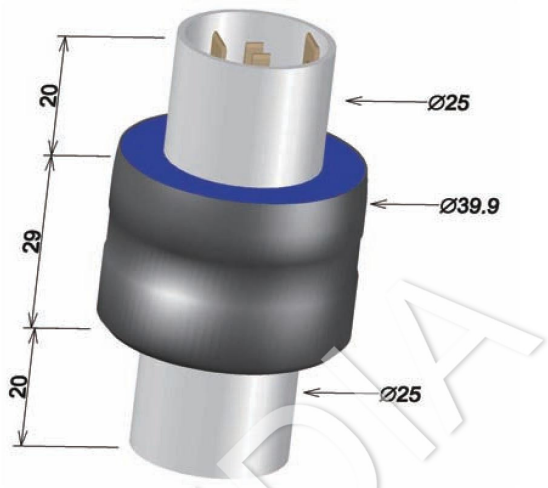

A3V4S NM (non-mercury)
2poles/4A/AC250V &
2poles/30A/AC250V &
2poles/30A/AC500V

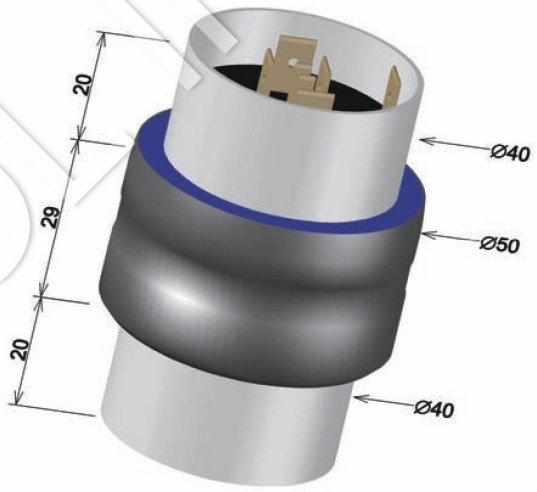

A2P NM (non-mercury)
2poles/30A/AC380V

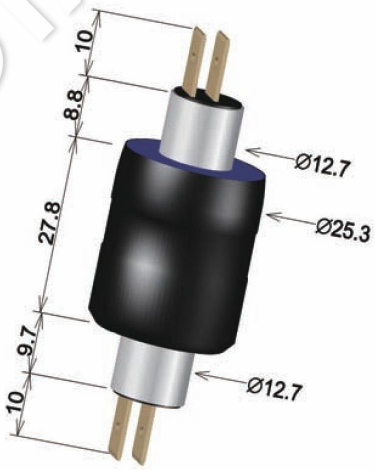

A4P NM (non-mercury)
2poles/4A/AC250V &
2poles/30A/AC500V

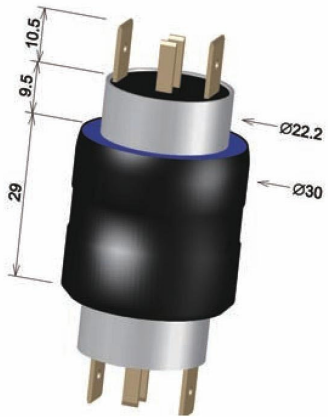

Non-mercury slip rings
CE RoHS compliance gallium alloy liquid metal rotary connectors
THROUGH BORE MULTI CONDUCTORS (16.2mm)

Specification

Model	Through - bore ψ	Conductor Poles	Current Amp.	Voltage AC/V	Max. Freq. MHZ	Max. RPM	Operating Temp. Max/Min ℃	Rotating Torque (gm-cm)	Insulation Resistance
H23016 NM	**16.2mm**	**2**	**30**	250	20	80	+80 / +8 - 0*	1000	> 25MΩ
H43016 NM	**16.2mm**	**4**	**30**	250	20	30	+80 / +8 - 0*	1500	> 25MΩ
H63016 NM	**16.2mm**	**6**	**30**	250	20	20	+80 / +8 - 0*	2000	> 25MΩ
H83016 NM	**16.2mm**	**8**	**30**	250	20	10	+80 / +8 - 0*	3000	> 25MΩ

*
- The minimum temperature for liquid metal 46L
- Solid temp is : + 7.6℃
- There is a "super cool" effect, when a slip ring contain liquid metal 46L put in the room temp. 0℃, the liquid metal will not be solid immediately, there will have a 2 – 4 days range the liquid metal 46L will keep in liquid status, just like the river water still run in the 0℃
- The liquid metal slip rings are recommended to be used within 3 months after shipping. If the slip ring has rotation not smooth condition after 3 months storage in the room temp. undertemp. +8℃. Please put it in the warm room (over 50 ℃) to recover the liquid metal status.
- The liquid metal is not so sticky like mercury which can be sticky (touched) on the silver plated conductor surface. The liquid metal slip rings'vibration resistance ability is much less than mercury types. Any light vibration, impact, shock will make the liquid metal to move out from the main conductor chamber to another conductor's room. That will make short circuit easily.

H23016 NM (non-mercury)
2poles/30A/AC250V
Through-bore:16.2mm

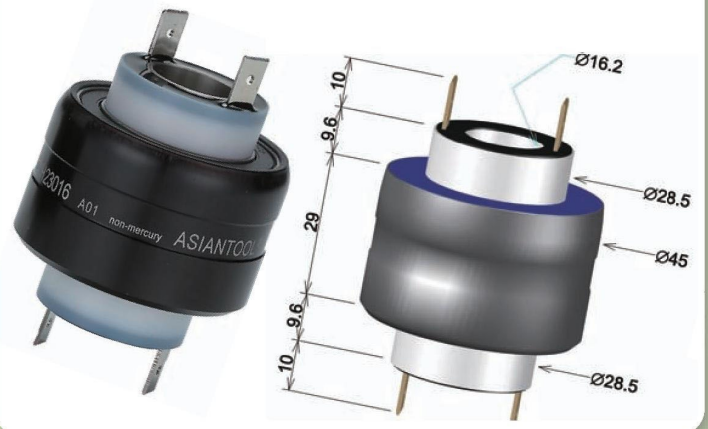

H43016 NM (non-mercury)
4poles/30A/AC250V
Through-bore:16.2mm

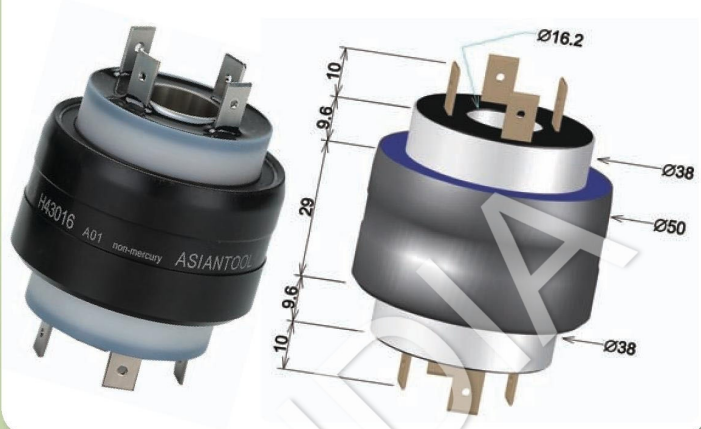

H63016 NM (non-mercury)
6poles/30A/AC250V Through-bore:16.2mm

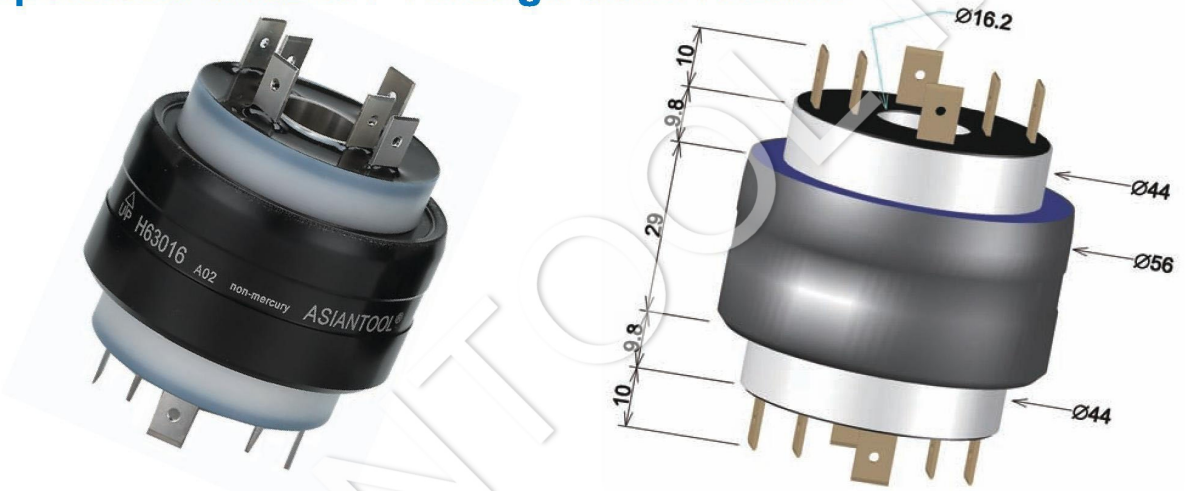

H83016 NM (non-mercury)
8poles/30A/AC250V Through-bore:16.2mm

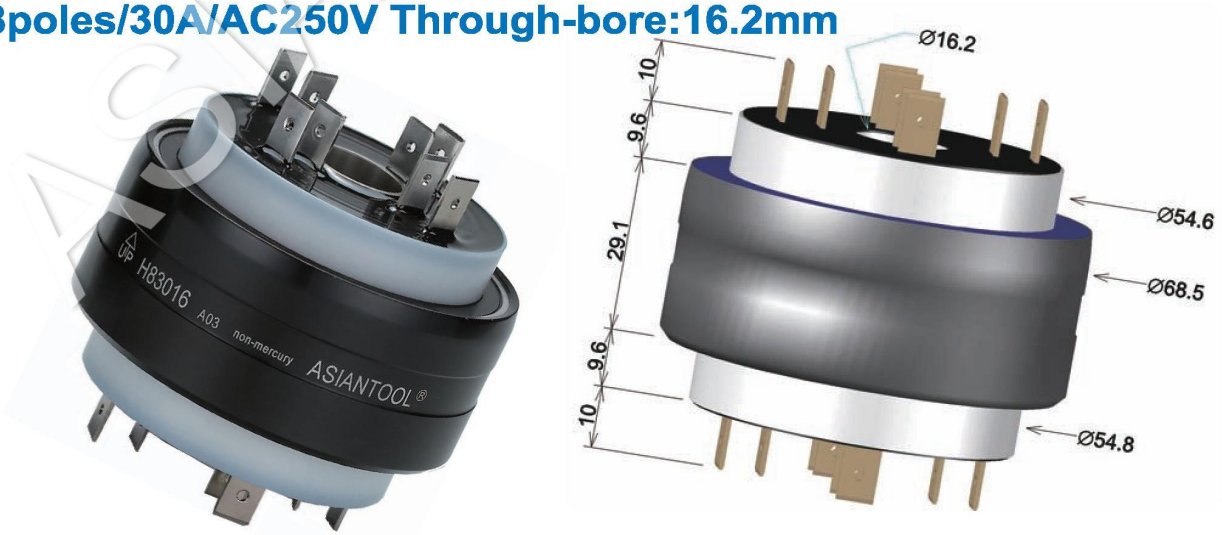

Non-mercury slip rings

CE RoHS compliance gallium alloy liquid metal rotary connectors

THROUGH BORE MULTI CONDUCTORS (10.2mm)

Specification

Model	Through -bore ψ	Conductor Poles	Current Amp.	Voltage AC/ V	Max. Freq. MHZ	Max. RPM	Operating Temp. Max/Min ℃	Rotating Torque (gm-cm)	Insulation Resistance
H23010 NM	**10.2mm**	**2**	**30**	250	20	100	+80 / +8 - 0*	700	> 25MΩ
H43010 NM	**10.2mm**	**4**	**30**	250	20	80	+80 / +8 - 0*	1000	> 25MΩ
H63010 NM	**10.2mm**	**6**	**30**	250	20	30	+80 / +8 - 0*	1500	> 25MΩ
H83010 NM	**10.2mm**	**8**	**30**	250	20	20	+80 / +8 - 0*	2000	> 25MΩ
H103010 NM	**10.2mm**	**10**	**30**	250	20	10	+80 / +8 - 0*	3000	> 25MΩ

*

- The minimum temperature for liquid metal 46L
- Solid temp is : + 7.6℃
- There is a "super cool" effect, when a slip ring contain liquid metal 46L put in the room temp. 0℃, the liquid metal will not be solid immediately, there will have a 2 – 4 days range the liquid metal 46L will keep in liquid status, just like the river water still run in the 0℃
- The liquid metal slip rings are recommended to be used within 3 months after shipping. If the slip ring has rotation not smooth condition after 3 months storage in the room temp. undertemp. +8℃. Please put it in the warm room (over 50 ℃) to recover the liquid metal status.
- The liquid metal is not so sticky like mercury which can be sticky (touched) on the silver plated conductor surface. The liquid metal slip rings'vibration resistance ability is much less than mercury types. Any light vibration, impact, shock will make the liquid metal to move out from the main conductor chamber to another conductor's room. That will make short circuit easily.

Model, Size, accessories

H23010 NM (non-mercury)
2poles/30A/AC250V
Through-bore:10.2mm

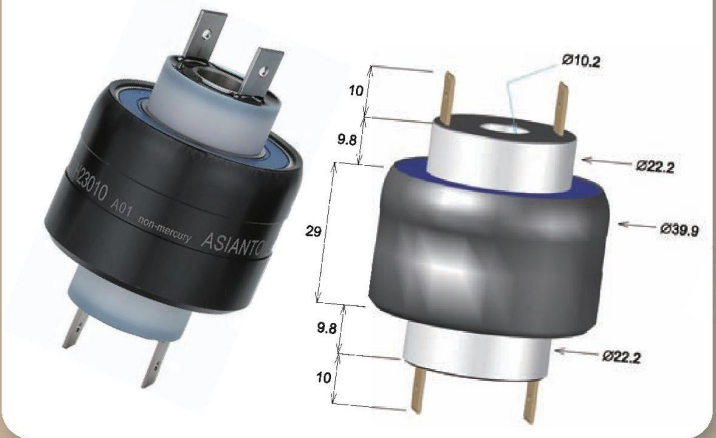

H43010 NM (non-mercury)
4poles/30A/AC250V
Through-bore:10.2mm

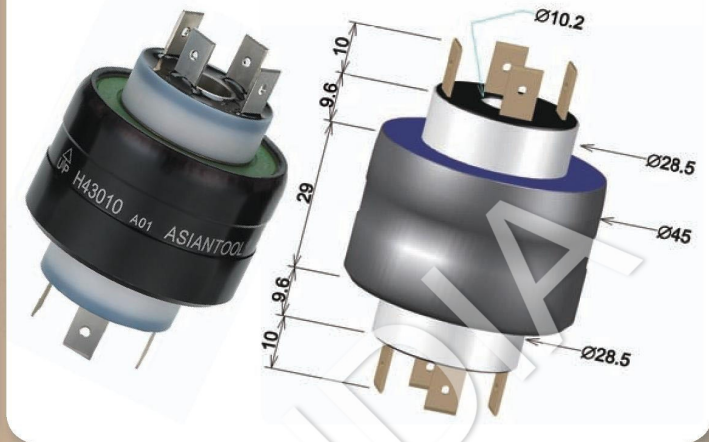

H63010 NM (non-mercury)
6poles/30A/AC250V
Through-bore:10.2mm

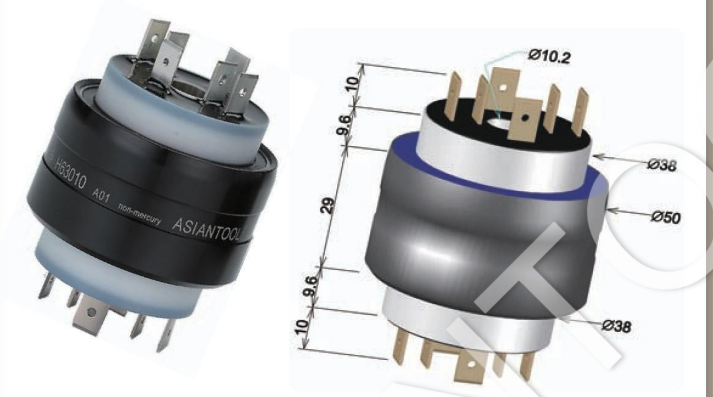

H83010 NM (non-mercury)
8poles/30A/AC250V
Through-bore:10.2mm

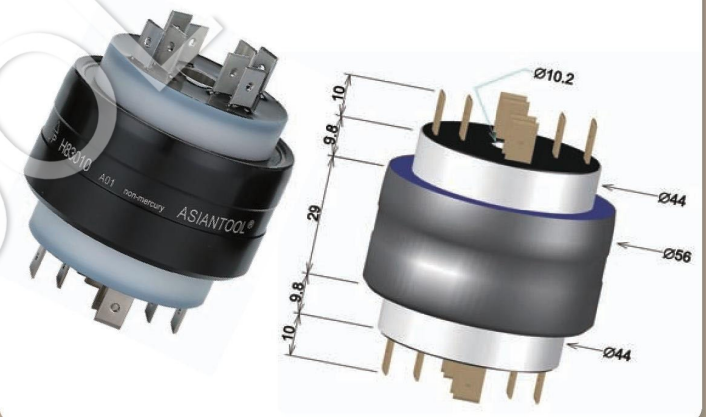

H103010NM (non-mercury)
10poles/30A/AC250V Through-bore:10.2mm

Boots Kit

- A4H-BK for A4H, A3H
- A6H-BK for A6H
- A8H-BK for A8H

Terminals&Shrink Tube

- SY28
- SR28
- SB63
- S63
- LB63
- LLB63
- LLB63C
- SK3

Notice

- Not exceed the Max. temperature 60˚C(140˚F), room temperature + self heating. (rotate + electric connection)
- Vertical mounting and storage should keep the UP in the up direction.
- Mounting into a shaft should keep no eccentricity.
- Do not solder on the connector and terminal.
- Connect the connector on the terminal only a few times, losing connection will cause heating when apply electric power.
- Vibration will cause service life shorter.
- The rotary connector can be mounted by the body or plastic collar but it can not carry mechanical loads. Another end should be conneted floating hold by electric wire.
- The uppers notice should be kept, otherwise it will cause the rotary connector failure or shorten service life.

We also produce any other customers made slip rings. Please contact us.